Identification Number Locations

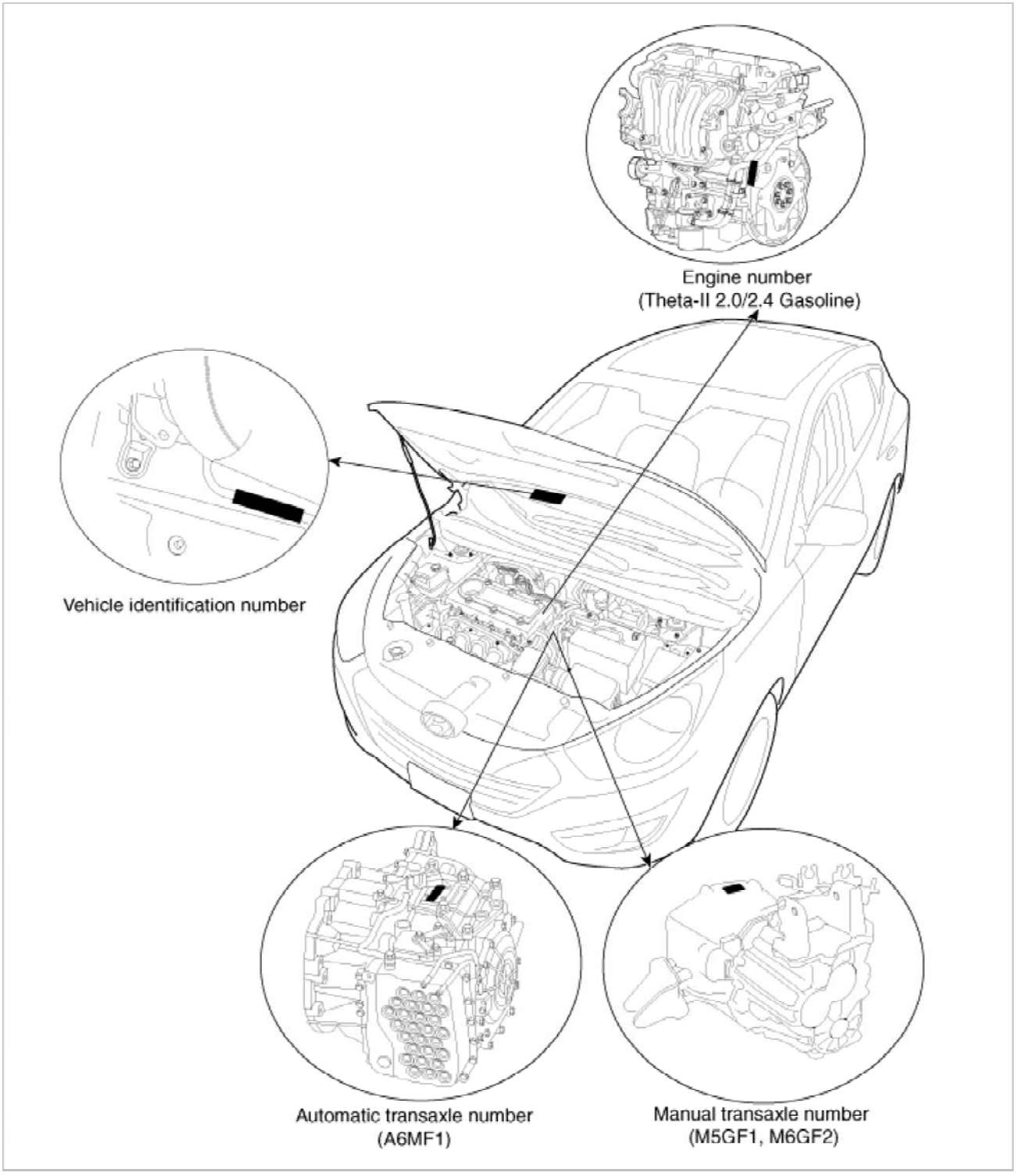

Identification Number Description

Vehicle Identification Number

mcx30.com

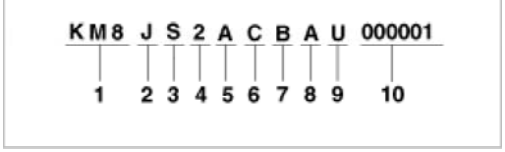

1. World Manufacturer Identifier (WMI)
   A. KMF : Commercial vehicle (Van)
   B. KMH : Passenger vehicle or MPV(Multipurpose Passenger Vehicle)/SUV(Sports Utility Vehicle)/RV(Recreational Vehicle)
   C. KMJ : Van
   D. KM8 : MPV/SUV/RV (For U.S.A, Canada, Mexico only)
2. Vehicle line
   A. J : TUCSON
3. Model & Series
   A. S : Low grade (L)
   B. T : Middle-Low grade (GL)
   C. U : Middle grade (GLS, JSL, TAX)
   D. V : Middle-High grade (HGS)
   E. W : High grade (TOP)
4. Body/Cabin type, Gross Vehicle Weight Rating
   KMF (Commercial vehicle / Van)
   Except U.S.A, Canada, Mexico, Gulf Cooperation Council, China
   - X : Standard Cabin / Semi-Bonnet
   - Y : Double Cabin / Bonnet
   - Z : Super Cabin / Box
   For U.S.A, Canada, Mexico, Gulf Cooperation Council, China
   - 3 : Standard Cabin Class-E 4×2 / Semi-Bonnet Class-E 4×2
   - 4 : Standard Cabin Class-E 4×4 / Semi-Bonnet Class-E 4×4
   - 5 : Standard Cabin Class-F 4×2 / Semi-Bonnet Class-F 4×2
   - 6 : Standard Cabin Class-F 4×4 / Semi-Bonnet Class-F 4×4
   - 7 : Double Cabin Class-E 4×2 / Bonnet Class-E 4×2
   - 8 : Double Cabin Class-E 4×4 / Bonnet Class-E 4×4
   - 9 : Double Cabin Class-F 4×2 / Bonnet Class-F 4×2
   - 0 : Double Cabin Class-F 4×4 / Bonnet Class-F 4×4
   - A : Super Cabin Class-E 4×2 / Box Class-E 4×2
   - B : Super Cabin Class-E 4×4 / Box Class-E 4×4
   - C : Super Cabin Class-F 4×2 / Box Class-F 4×2
   - D : Super Cabin Class-F 4×4 / Box Class-F 4×4
   KMH
   - 1 : Limousine
   - 2 : Sedan - 2 door
   - 3 : Sedan - 3 door
   - 4 : Sedan - 4 door
   - 5 : Sedan - 5 door
   - 6 : Coupe
   - 7 : Convertible
   - 8 : Wagon
   - 9 : Commercial Van
   - 0 : Pick-Up
   KMJ
   - 1 : Box
   - 2 : Bonnet
   - 3 : Semi-Bonnet
   KM8
   - 1 : Wagon 4×2 Class-A
   - 2 : Wagon 4×2 Class-B
   - 3 : Wagon 4×2 Class-C
   - 4 : Wagon 4×2 Class-D

mcx30.com

- 6 : Wagon 4×2 Class-F
- 7 : Wagon 4×2 Class-G
- A : Wagon 4×4 Class-A
- B : Wagon 4×4 Class-B
- C : Wagon 4×4 Class-C
- D : Wagon 4×4 Class-D
- E : Wagon 4×4 Class-E
- F : Wagon 4×4 Class-F
- G : Wagon 4×4 Class-G

5. Restraint system, Brake system

KMH, KM8

Except U.S.A, Canada, Mexico

- 0 : Both side - None
- 1 : Both side - Active belt
- 2 : Both side - Passive belt

For U.S.A, Canada, Mexico

Code	Seat belt	Front air bag		Knee air bag		Side air bag			Curtain air bag		
		Driver's	Passenger's	Driver's	Passenger's	1st row	2nd row	3rd row	1st row	2nd row	3rd row
A	○	○	○	×	×	○	×	×	○	○	×
B	○	○	○	×	×	×	×	×	×	×	×
C	○	○	○	×	×	○	×	×	○	○	○
D	○	○	○	×	×	○	○	×	○	○	×
E	○	○	×	×	×	×	×	×	×	×	×
F	○	○	○	×	×	○	×	×	×	×	×
N	○	×	×	×	×	×	×	×	×	×	×

KMJ

Except U.S.A, Canada, Mexico

- 7 : Hydraulic brake system
- 8 : Pneumatic brake system
- 9 : Mixed brake system

For U.S.A, Canada, Mexico

- X : Hydraulic brake system
- Y : Pneumatic brake system
- Z : Mixed brake system

KMF

Except U.S.A, Canada, Mexico

- 7 : Hydraulic brake system
- 8 : Pneumatic brake system
- 9 : Mixed brake system

For U.S.A, Canada, Mexico

Code	Restraint system											Brake system		
	Seat belt	Front air bag		Knee air bag		Side air bag			Curtain air bag			Hydrauric	Pneumatic	Mixed
		Driver's	Passenger's	Driver's	Passenger's	1st row	2nd row	3rd row	1st row	2nd row	3rd row			
X	○	×	×	×	×	×	×	×	×	×	×	○	-	-
V	○	○	×	×	×	×	×	×	×	×	×	○	-	-
W	○	○	○	×	×	×	×	×	×	×	×	○	-	-

6. Engine type

A. B : Gasoline engine 2.0

B. C : Gasoline engine 2.4

mcx30.com

Except U.S.A, Canada, Mexico, Gulf Cooperation Council, China, Yemen
- A : LHD & MT
- B : LHD & AT
- C : LHD & MT+Transfer
- D : LHD & AT+Transfer
- E : LHD & CVT
- L : RHD & MT
- M : RHD & AT
- N : RHD & MT+Transfer
- S : RHD & AT+Transfer
- T : RHD & CVT

For U.S.A, Canada, Mexico, Gulf Cooperation Council, China, Yemen
- Check digit : 0 ~ 9, ×

8. Production year
   A. A : 2010, B : 2011, C : 2012, D : 2013 ...
9. Plant of production
   A. A : Asan (Korea)
   B. B : Beijing (China)
   C. C : Cheonju (Korea)
   D. H : Alabama (U.S.A)
   E. M : Chennai (India)
   F. U : Ulsan (Korea)
   G. Z : Izmit (Turkey)
   H. J : Ostrava (Czech)
10. Vehicle production sequence number
    A. 000001 ~ 999999

Paint Code

Code	Color
WAB	Vanilla white
WEA	Sleek silver
WJX	Hyper metallic
TAK	Gray titanium
TCM	Phantom black
TFP	Silky bronze
SAZ	Remington red
TGY	Inky blue
SCM	Eco green
UDK	Blue ocean
THE	Blue ice

Engine Number

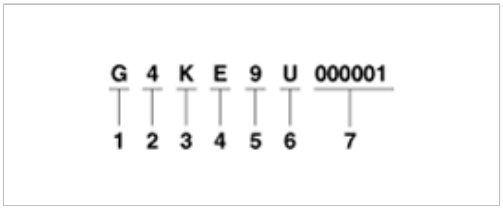

1. Engine fuel
   - G : Gasoline
2. Engine range
   - 4 : 4 cycle 4 cylinder

mcx30.com

- K : Theta engine (Gasoline)

4. Engine Capacity
   - D : 1998cc (Theta-II engine)
   - E : 2359cc (Theta-II engine)
5. Production year
   - 9 : 2009, A : 2010, B : 2011, C : 2012, D : 2013...
6. Plant of production
   - A : Asan (Korea)
   - B : Beijing (China)
   - H : Hwasung (Korea)
   - K : Montgomery (U.S.A)
   - M : Chennai (India)
   - P : Poseung (Korea)
   - S : Sohari (Korea)
   - T : Izmit (Turkey)
   - U : Ulsan (Korea)
   - W : Shandong (China)
   - Z : Zilina (Slovakia)
   - 1 : Yancheng (China)
7. Engine production sequence number
   - 000001 ~ 999999

Transaxle Number

Manual (M6GF2)

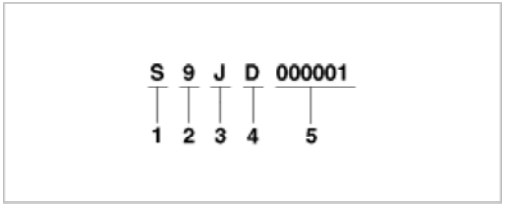

1. Model
   - S : M6GF2
2. Production year
   - 9 : 2009, A : 2010, B : 2011, C : 2012, D : 2013...
3. Plant of production
   - J : Hwaseong (Korea)
4. Final gear ratio
   - D : 5.071 / 3.737
5. Transaxle production sequence number
   - 000001 ~ 999999

Manual (M5GF1)

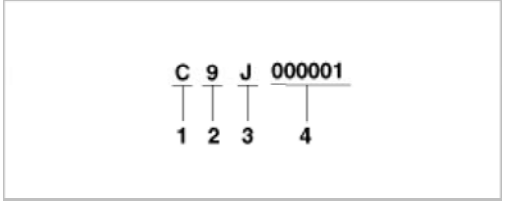

1. Model
   - C : M5GF1
2. Production year
   - 9 : 2009, A : 2010, B : 2011, C : 2012, D : 2013...
3. Gear ratio
   - J : 4.533

mcx30.com

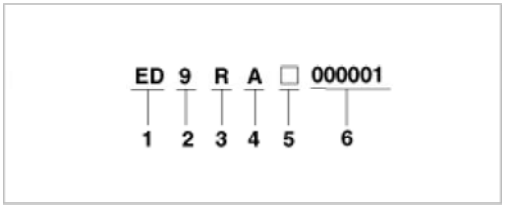

1. Model
   - EB: A6MF1 (Theta-II 2.0/2.4, 2WD, water cooling)
   - ED: A6MF1 (Theta-II 2.0/2.4, 4WD, water cooling)
2. Production year
   - 9 : 2009, A : 2010, B : 2011, C : 2012, D : 2013...
3. Gear ratio
   - V : 3.648
   - R : 3.195
4. Detailed classification
   - A : Theta-II 2.0/2.4 (A6MF1)
5. Spare
6. Transaxle production sequence number
   - 000001 ~ 999999

Warning / Caution Label Locations

mcx30.com

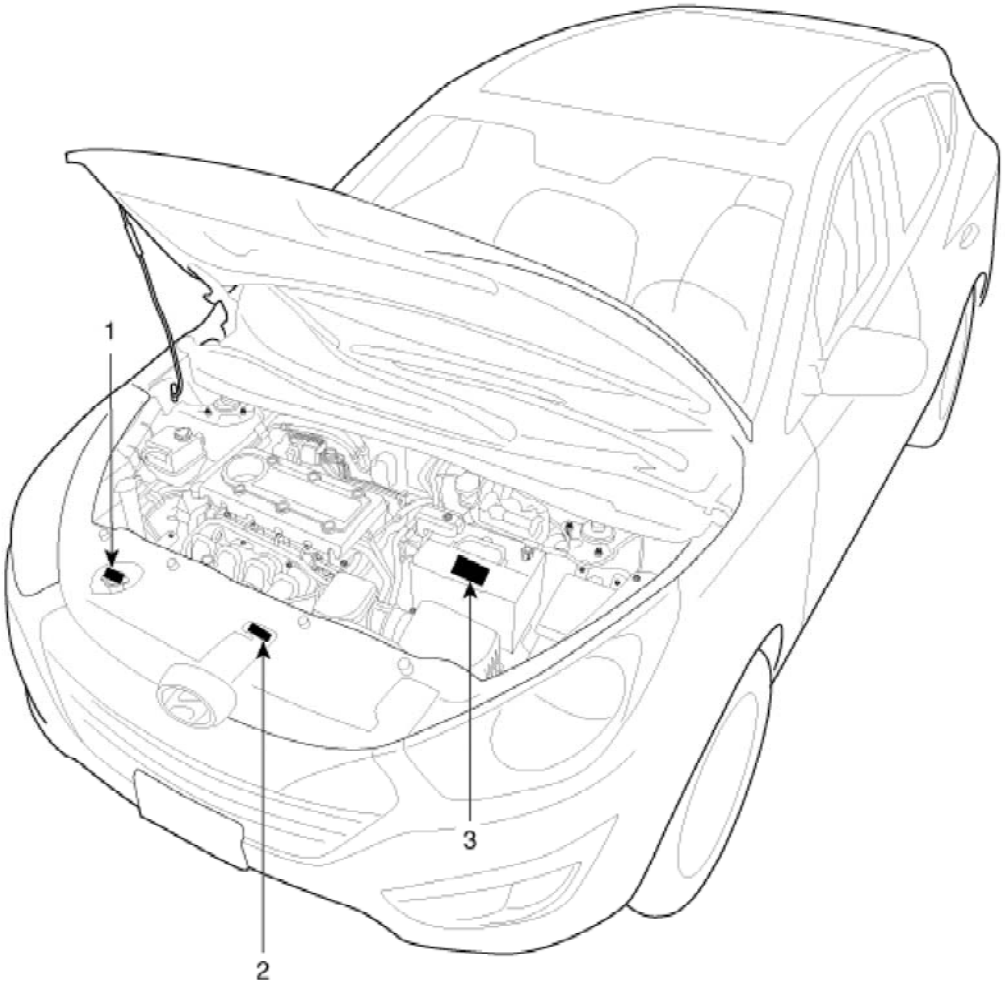

1. Radiator cap caution 2. Fan caution	3. Battery caution

Battery Caution Label Describtion

mcx30.com

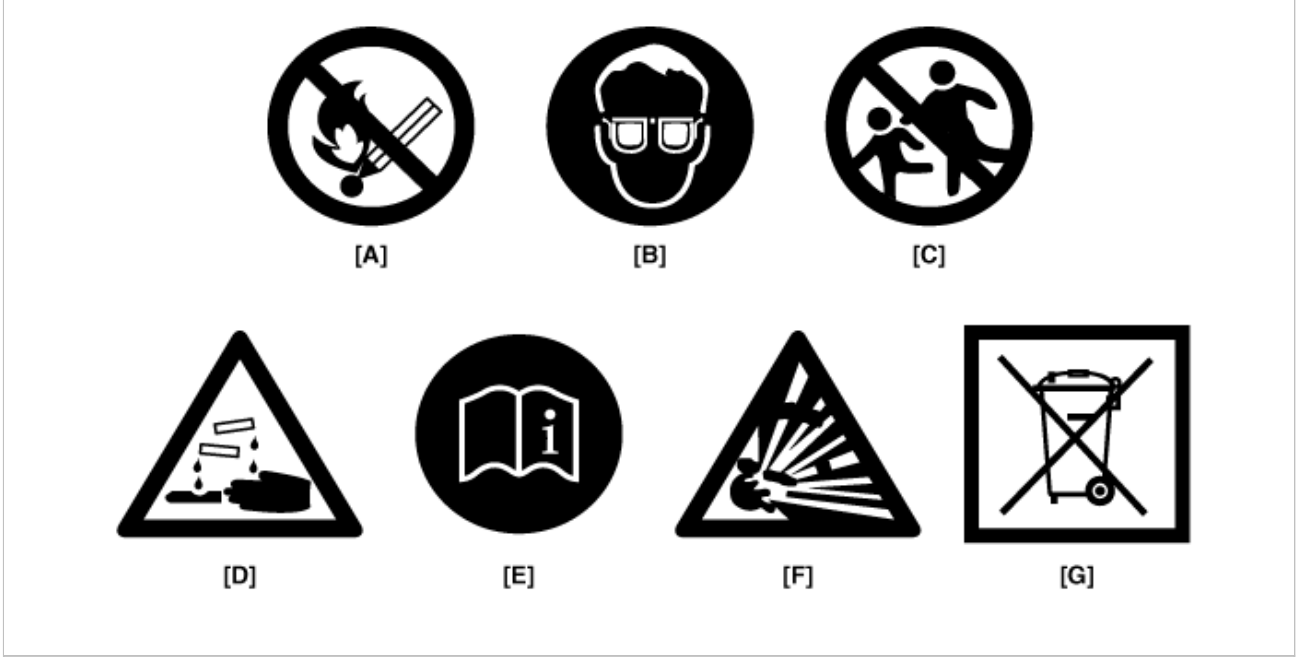

Warning / Caution Label (Cont'd)

A.
Keep lighted cigarettes and all other flames or sparks away from the battery.

B.
Wear eye protection when charging or working near a battery. Always provide ventilation when working in an enclosed space.

- When lifting a plastic-cased battery, excesive pressure on acid to leak resulting in personal injury. Lift with a battery carrier or with your hands on opposite corners.
- Never attempt to change the battery when the battery cables are connected.
- The electrical ignition system works with high voltage.
  Never touch these components with the engine running or the ignition switched on.

C.
Keep batteries out of the reach of children because batteries contain highly corrosive SULFURIC ACID. Do not allow battery acid to contact your skin, eyes, clothing or paint finish.

D.
If any electrolyte gets into your eyes, flush your eyes with clean water for at least 15 minutes and get immediate medical attention. If possible, continue to apply water with a sponge or cloth until medical attention is received.
If electrolyte gets on your skin, throughly wash the contacted area. If you feel a pain or a burning sensation, get medical attention immediately.

E.
Always read the following instructions carefully when handing a battery.

F.
Hydrogen, which is a highly combustible gas, is always presents in battery cells and may explode if ignited.

G.
An improperly disposed battery can be harmful to the environment and human health.
Always confirm local regurations for battery disposal.

Handling And Storage The Battery

mcx30.com

	direct sunlight. • MF batteries are tightly sealed to prevent acid leakage. However, tilting the battery to an angle of 45 degrees can cause acid to leak through the vents on the sides. Therefore, batteries should always be stored in their upright positions. Prevent placing any aqueous or solid (i.e. conductors) bodies on top of the battery. • It is extremely dangerous to use tools, such as hammers, on the battery terminals when connecting cables to the mounted battery.
Battery on Vehicle	• When storing the vehicle for long periods of time, make sure to remove the memory fuse at junction box to prevent natural discharging. • Also, run the engine for battery charging within 1 month if the memory fuse wasn't removed from the start of vehicle storing. If the memory fuse was removed, run the engine for battery charging within 3 months from the start of vehicle storing.

NOTE

After reconnecting or recharging a discharged battery, the ESC OFF indicator may illuminate.
In this case, turn the handle half way to the left and right whilst the ignition switch is in the ON position.
Then, restart the engine after the ignition is OFF.
The ESC OFF indicator may turn OFF.
If the ESC OFF indicator does not turn OFF, have the system checked refering to DTC. (Refer to the BR group.)

Lift And Support Points

WARNING

When heavy rear components such as suspension, fuel tank, spare tire, tailgate and trunk lid are to be removed, place additional weight in the luggage area before hoisting. When substatial weight is removed from the rear of the vehicle, the center of gravity may change and can cause the vehicle to tip forward on the hoist.

NOTE

- Since each tire/wheel assembly weights approximately 30lbs (14kg), placing the front wheels in the luggage area can assist with the weight distribution.
- Use the same support points to support the vehicle on safety stands.

1. Place the lift blocks under the support points as shown in the illustration.
2. Raise the hoist a few inches (centimeters) and rock the vehicle to be sure it is firmly supported.
3. Raise the hoist to full height to inspect the lift points for secure support.

mcx30.com

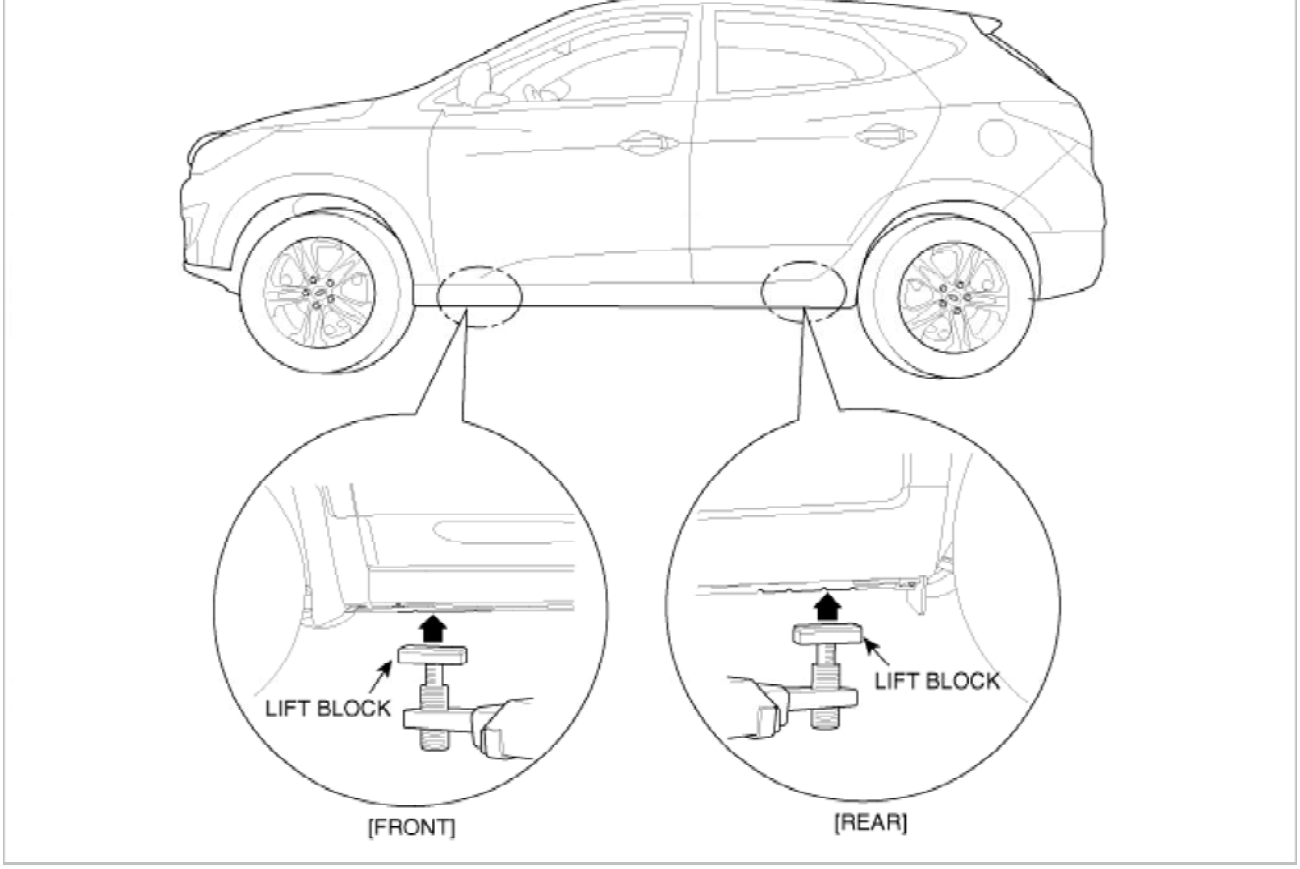

Towing

If the vehicle needs to be towed, call a professional towing service. Never tow vehicle with just a rope or chain. It is very dangerous.

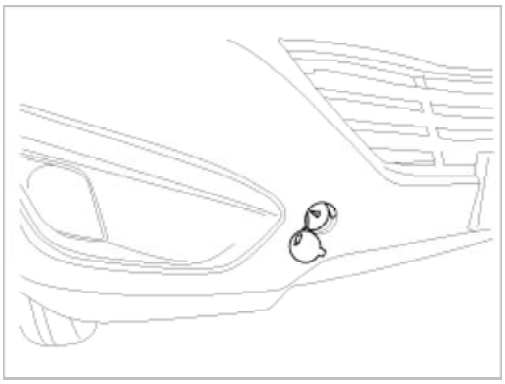

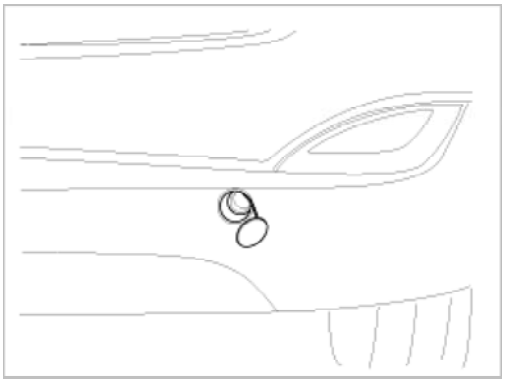

Emergency Towing

There are three popular methods of towing a vehicle :

- The operator loads the vehicle on the back of truck. This is best way of transporting the vehicle.
- The tow truck uses two pivoting arms that go under the tires of the driving axle and lift them off the ground. The other

mcx30.com

- The tow truck uses metal cables with hooks on the ends. These hooks go around parts of the frame or suspension, and the cables lift that end of the vehicle off the ground. The vehicle's suspension and body can be seriously damaged if this method of towing is attempted.

If the vehicle cannot be transported by flat-bed, should be towed with the wheels of the drivig axle off the ground and do the following :

Manual Transaxle

- Release the parking brake.
- Shift the Transaxle to neutral

Automatic Transaxle

- Release the parking brake.
- Start the engine.
- Shift to [D] position, then [N] position.
- Turn off the engine.

CAUTION

- The vehicle equipped with full-time 4WD should be only transported on a flat-bed.
- Improper towing preparation will damage the transaxle. follow the above procedure exactly. If you cannot shift the transaxle or start the engine(automatic transaxle), your vehicle must be transported on a flatbed.
- It is the best to tow vehicle no farther than 30km (19miles), and keep the speed below 50km/h (30mph). (For the full-time 4WD vehicle, limit the towing to 1.5km (1mile) and 15km/h (10mph)
- Trying to lift or tow your vehicle by the bumpers will cause serious damage. The bumpers are not designed to support the vehicle's weight.

Tightening Torque Table Of Standard Parts

Bolt niminal diameter (mm)	Pich (mm)	Torque Nm (kg.cm, lb.ft)	
		Head Mark 4	Head Mark 7
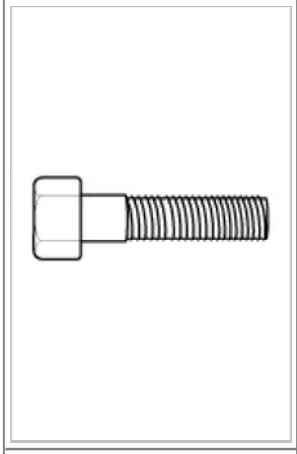	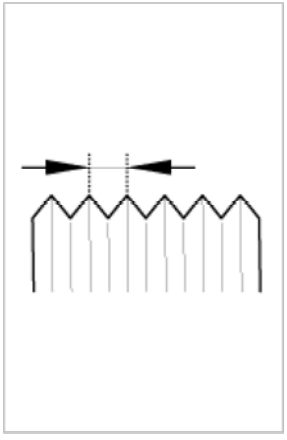	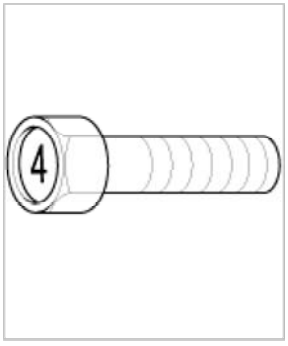	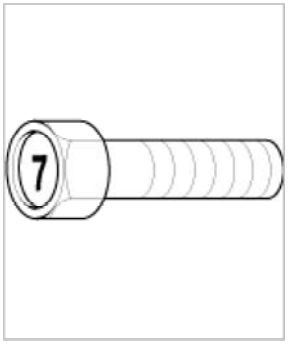
M5	0.8	3 ~ 4 (30 ~ 40, 2.2 ~ 2.9)	5 ~ 6 (50 ~ 60, 3.6 ~ 4.3)
M6	1.0	5 ~ 6 (50 ~ 50, 3.6 ~ 4.3)	9 ~ 11 (90 ~ 110, 6.5 ~ 8.0)
M8	1.25	12 ~ 15 (120 ~ 150, 9 ~ 11)	20 ~ 25 (200 ~ 250, 14.5 ~ 18.0)
M10	1.25	25 ~ 30 (250 ~ 300, 18 ~ 22)	30 ~ 50 (300 ~ 500, 22 ~ 36)
M12	1.25	35 ~ 45 (350 ~ 450, 25 ~ 33)	60 ~ 80 (600 ~ 800, 43 ~ 58)
M14	1.5	75 ~ 85 (750 ~ 850, 54 ~ 61)	120 ~ 140 (1,200 ~ 1,400, 85 ~ 100)
M16	1.5	110 ~ 130 (1,100 ~ 1,300, 80 ~ 94)	180 ~ 210 (1,800 ~ 2,100, 130 ~ 150)
M18	1.5	160 ~ 180 (1,600 ~ 1,800, 116 ~ 130)	260 ~ 300 (2,600 ~ 3,000, 190 ~ 215)
M20	1.5	220 ~ 250 (2,200 ~ 2,500, 160	360 ~ 420 (3,600 ~ 4,200, 260

mcx30.com

M22	1.5	290 ~ 330 (2,900 ~ 3,300, 210 ~ 240)	480 ~ 550 (4,800 ~ 5,500, 350 ~ 400)
M24	1.5	360 ~ 420 (3,600 ~ 4,200, 260 ~ 300)	610 ~ 700 (6,100 ~ 7,000, 440 ~ 505)

NOTE

1. The torques shown in the table are standard values under the following conditions.
   - Nuts and bolts are made of galvanized steel bar.
   - Galvanized plain steel washers are inserted.
   - All nuts, bolts and plain washers are dry.
2. The torques shown in the table are not applicable.
   - When spring washers, toothed washers and the like are inserted.
   - If plastic parts are fastened.
   - If self-tapping screws or self-locking nuts are used.
   - If threads and surfaces are coated with oil.
3. Reduce the torque values to the indicated percentage of the standard value under the following conditions.
   - If spring washers are used : 85%
   - If threads and bearing surfaces are stained with oil : 85%

General Service Information

Protection Of The Vehicle

Always be sure to cover fenders, seats, and floor areas before starting work.

CAUTION

The support rod must be inserted into the hole near the edge of the hood whenever you inspect the engine compartment to prevent the hood from falling and causing possible injury.
Make sure that the support rod has been released prior to closing the hood. Always check to be sure the hood is firmly latched before driving the vehicle.

Preparation Of Tools And Mesuring Equipment

Be sure that all necessary tools and measuring equipment are available starting work.

Special Tools

Use special tools when they are required.

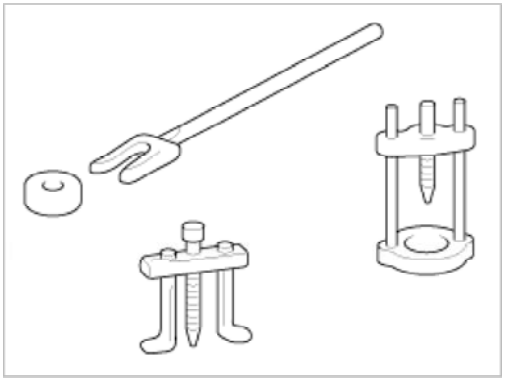

Removal Of Parts

First find the cause of the problem and then determine whether removal or disassembly before starting the job.

mcx30.com

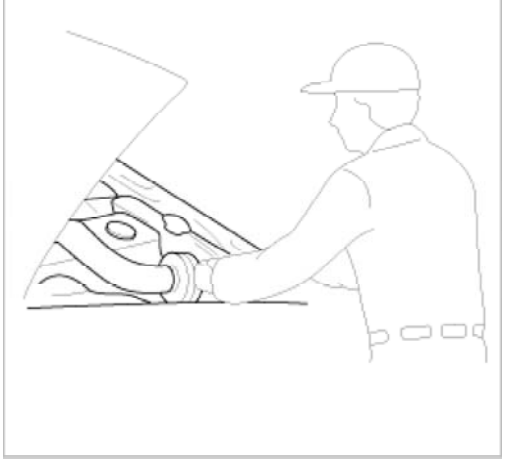

Disassembly

If the disassembly procedure is complex, requiring many parts to be disassembled, all parts should be disassembled in a way that will not affect their performance or external appearance.

1. **Inspection of parts**
   Each part, when removed, should be carefully on suspected for malfunction, deformation, damage, and other problems.

2. **Arrangement of parts**
   All disassembled parts should be carefully arranged for effective reassembly.
   Be sure to separate and correctly identify the parts to be replaced from those that will be used again.

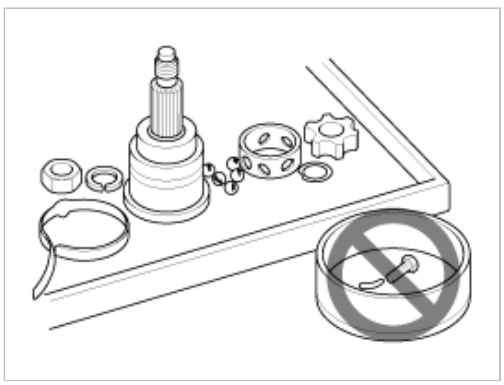

3. **Cleaning parts for reuse**
   All parts to be used again should be carefully and thoroughly cleaned by an appropriate method.

mcx30.com

Parts

When replacing parts, use HYUNDAI genuine parts.

Replacement

Standard values, such as torques and certain adjustments, must be strictly observed in the reassembly of all parts.
If removed, the following parts should always be replaced with new ones.

1. Oil seals
2. Gaskets
3. O-rings
4. Lock washers
5. Cotter pins (split pins)
6. Plastic nuts

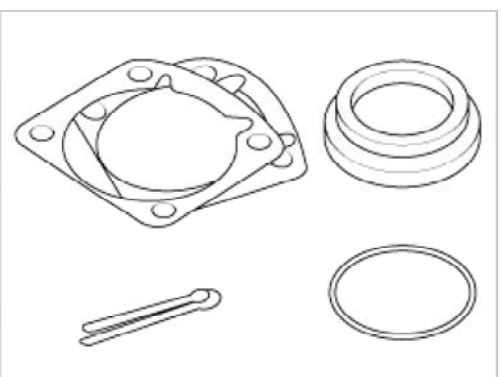

Depending on their location.

7. Sealant should be applied to gaskets.
8. Oil should be applied to the moving components of parts.
9. Specified oil or grease should be applied to the prescribed locations (oil seals, etc) before assembly.

mcx30.com

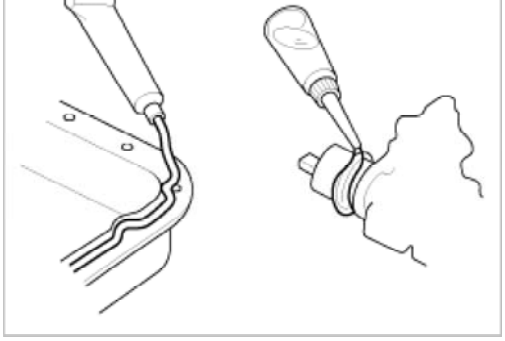

Adjustment

Use gauges and testers to adjust correctly the parts to standard values correctly.

Electrical System

1. Be sure to disconnect the battery cable from the negative (-) terminal of the battery.
2. Never pull on the wires when disconnecting connectors.
3. Locking connectors will click when the connector is secure.
4. Handle sensors and relays carefully. Be careful not to drop them against other parts.

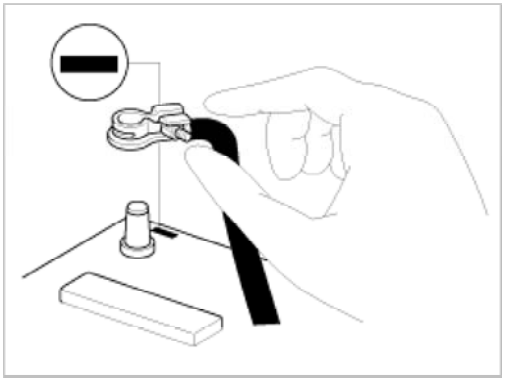

Ruber Parts And Tubes

Always prevent gasoline or from touching rubber parts or tubing.

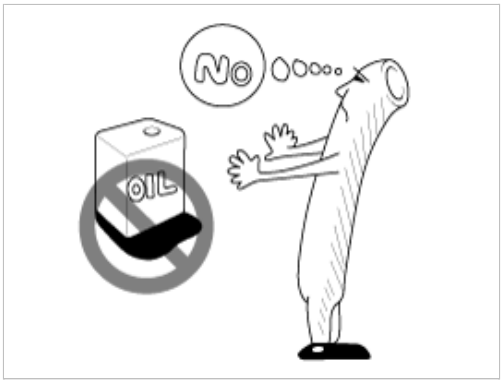

Measuring Body Dimensiongs

1. Basically, all measurements in this manual are taken with a tracking gauge.
2. When a measuring tape is used, check to be sure there is no elongation, twisting or bending.
3. For measuring dimensions, both projected dimensions and actual - measurement dimensions are used in this manual.

Dimensions Projected

1. These are the dimensions measured when the measurement points are projected from the vehicle's surface, and are the reference dimensions used for used for body alterations.
2. If the length of the tracking gauge probes is adjustable, measure it by lengthening one of two probes as long as the different value in height of the two surface.

mcx30.com

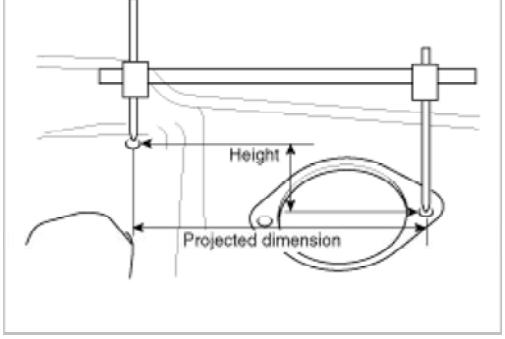

Measuring Actual Dimensions

1. These dimensions indicate the actual linear distance between measurement points, and are used as the reference dimensions when a tracking gauge is used for measurement.
2. First adjust both probes to the same length (A=A') before measurement.

> **NOTE**
>
> Check the probes and gauge itself to make sure there is no free play.

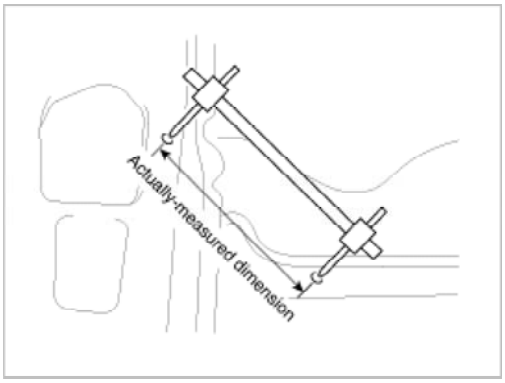

Measurement Point

Measurements should be taken at the center of the hole.

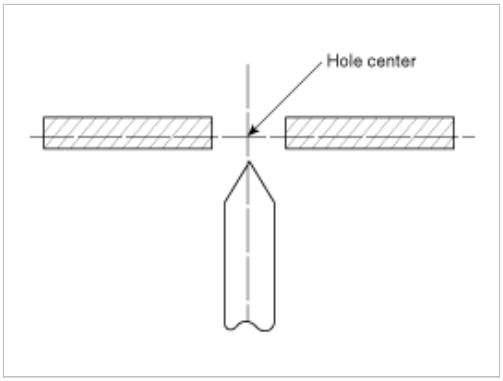

Checking Cables And Wires

1. Check the terminal for tightness.
2. Check terminals and wires for corrosion from battery electrolyte, etc.
3. Check terminals and wires for open circuits.
4. Check wire insulation and coating for damage, cracks and degrading.
5. Check the conductive parts of terminals for contact with other metallic parts (vehicle body and other parts).
6. Check grounded parts to verify that there is complete continuity between their attaching bolt(s) and the vehicle's body.
7. Check for incorrect wiring.
8. Check that the wiring is so clamped to the prevent contact with sharp corners of the vehicle body, etc. or hot parts

mcx30.com

9. Check that the wiring is clamped firmly to provide enough clearance from the fan pulley, fan belt and other rotating or moving parts.
10. Check that the wiring has a little space so that it can vibrate between fixed and moving parts such as the vehicle body and the engine.

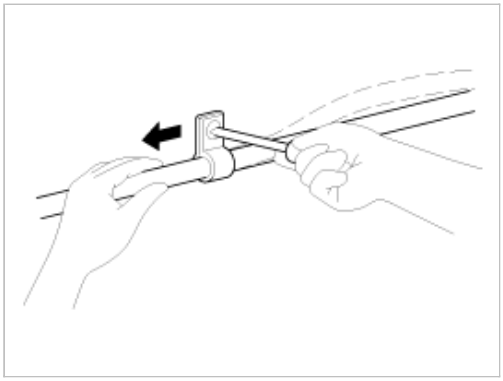

Check Fuses

A blade type fuse test taps provided to allow checking the fuse itself without removing if from the fuse box. The fuse is good if the test lamp lights up when one lead is connected to the test taps (one at a time) and the other lead is grounded. (Turn the ignition switch so that the fuse circuit becomes operative)

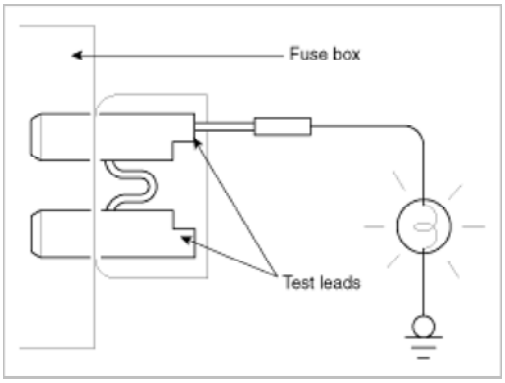

Serivicing The Electrical System

1. Prior to servicing the electrical system, be sure to turn off the ignition switch and disconnect the battery ground cable.

> **NOTE**
>
> In the course of MFI or ELC system diagnosis, when the battery cable is removed, any diagnostic trouble code retained by the computer will be cleared. There fore, if necessary, record the diagnostic data before removing the battery cable.

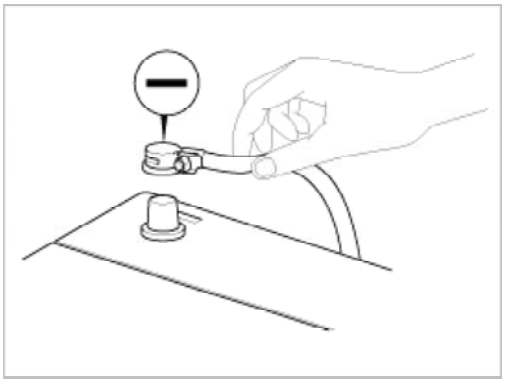

2. Attach the wiring harnesses with clamps so that there is no slack. However, for any harness which passes the engine or other vibrating parts of the vehicle, allow some slack within a range that does not allow the engine vibrations to cause the harness to come into contact with any of the surrounding parts and then secure the harness by using a clamp.

mcx30.com

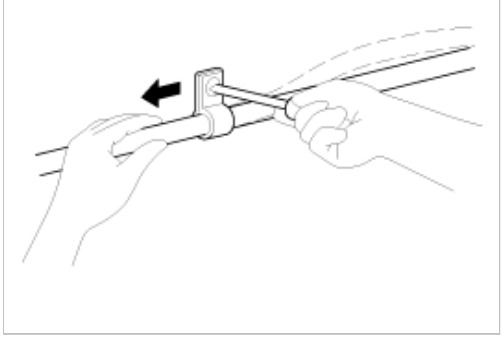

3. If any section of a wiring harness interferes with the edge of a parts, or a corner, wrap the section of the harness with tape or something similar in order to protect if from damage.

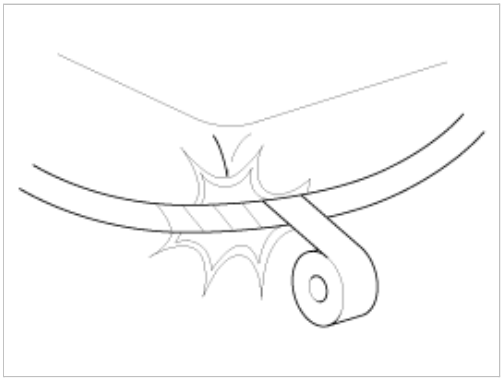

4. When installing any parts, be careful not to pinch or damage any of the wiring harness.

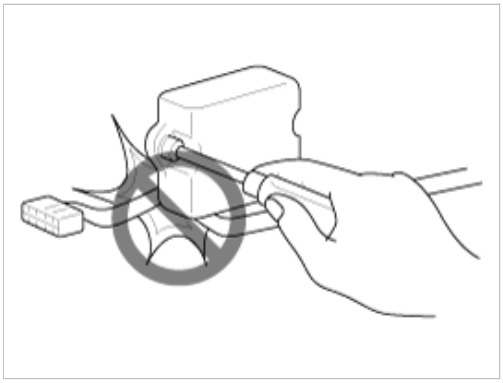

5. Never throw relays, sensors or electrical parts, or expose them to strong shock.

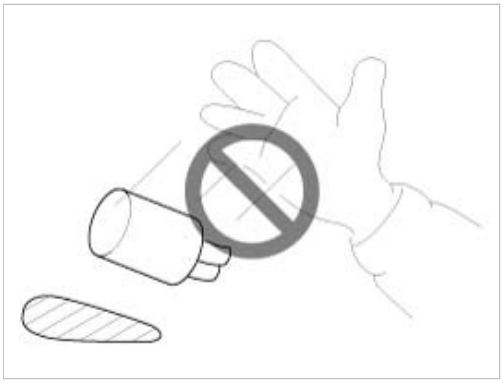

6. The electronic parts used in the computer, relays, etc. are readily damaged by heat. If there is a need for service operations that may cause the temperature to exceed 80°C (176°F), remove the electronic parts before hand.

mcx30.com

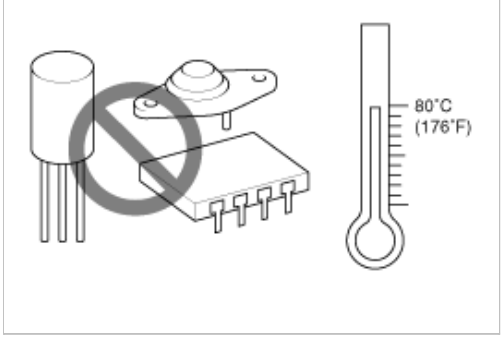

7. Loose connectors cause problems. Make sure that the connectors are always securely fastened.

8. When disconnecting a connector, be sure to grip only the connector, not the wires.

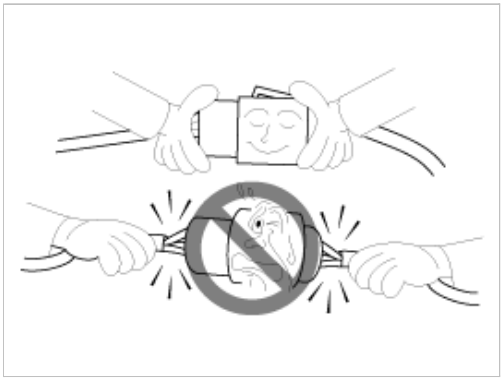

9. Disconnect connector which have catches by pressing in the direction of the arrows shown the illustration.

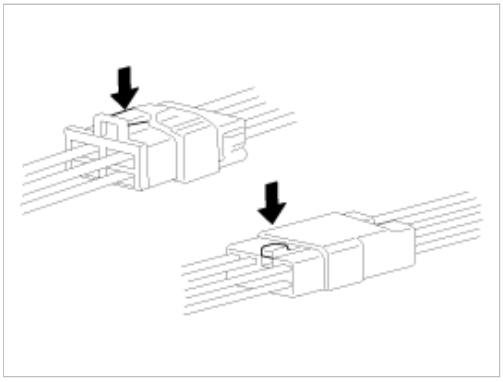

10. Connect connectors which have catches by inserting the connectors until they make a clicking sound.

mcx30.com

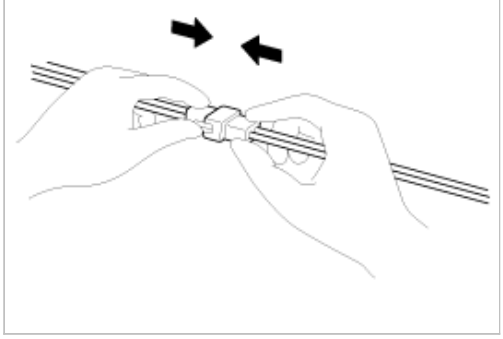

11. When using a circuit tester to check continuity or voltage on connector terminals, insert the test probe into the harness side. If the connector is a sealed connector, insert the test probe through the hole in the rubber cap until contacts the terminal, being careful not to damage the insulation of the wires.

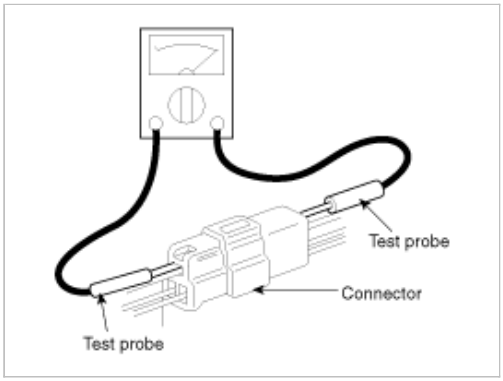

12. To avoid overloading the wiring, take the electrical current load of the optional equipment into consideration, and determine the appropriate wire size.

Noeminal size	SAE gauge No.	Permissible current	
		In engine compartment	Other areas
0.3mm²	AWG 22	-	5A
0.5mm²	AWG 20	7A	13A
0.85mm²	AWG 18	9A	17A
1.25mm²	AWG 16	12A	22A
2.0mm²	AWG 14	16A	30A
3.0mm²	AWG 12	21A	40A
5.0mm²	AWG 10	31A	54A

Precautions For Catalytic Converter

CAUTION

If a large amount of unburned gasoline flows into the converter, it may overheat and create a fire hazard. To prevent this observe the following precations and explain them to your customer.

1. Use only unleaded gasoline.
2. Do not run the engine while the car is at rest for a long time. Avoid running the engine at fast idle for more than 10minutes and idle speed for more than 20 minutes.
3. Do not measure engine compression for an extended time. Engine compression tests must be made as rapidly as possible. Remove the fuel pump relay before performing a compression test.
4. Do not dispose of used catalytic converter together with parts contaminated with gasoline or oil.

mcx30.com